Journal of Chemical Reviews, 2020, Volume 2, Issue 4, pages 274-283.

Mini-Review Article

Modeling and Optimization in VSC-HVDC Transmission Lines in Chemical Industry, A review

Roohollah Sadeghi Goughari, Mehdi Jafari Shahbazzadeh*

Department of Electrical Engineering, Kerman Branch, Islamic Azad University, Kerman, Iran

Receive Date: 18 August 2020, **Revise Date:** 24 September 2020, **Accept Date:** 04 October 2020

Abstract: High voltage direct current system is a type of high voltage direct current transmission system. This method is a new way to transfer electrical energy on a large scale and so it is a good alternative to traditional method (using alternating current). An integrated system is required to transfer electricity from power plants to consumers. This system includes energy production centers, stations, transmission lines or cables and Egyptians. In this research study, we discuss the VSC-HVDC transmission system and line stability methods will be evaluated in the presence of scattered production resources. For this reason, in the first part, the HVDC system and the two-level VSC control converter are discussed and in the second part, a summary of scattered production sources (wind turbine and photovoltaic system) is presented.

Key words: High voltage direct; Power plants; Energy production; VSC-HVDC

Graphical Abstract:

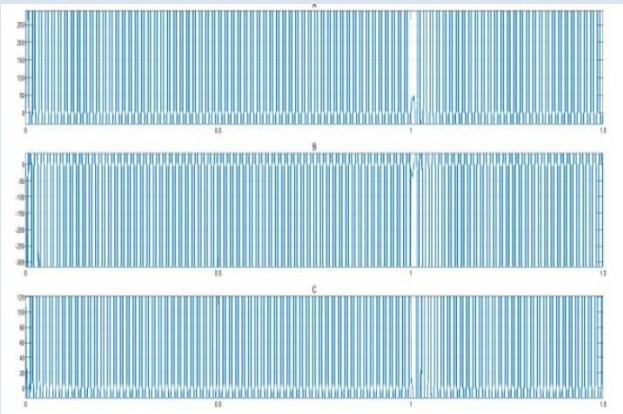

Roohollah Sadeghi Goughari, PhD in Electrical Engineering, He received his undergraduate degree from Shahid Bahonar University in year 2004. He received his master's degree from the Islamic Azad University of Sirjan Branch in year 2013. In the same year he received his doctorate in electrical power at Kerman Free University From the beginning, the doctoral thesis has been studying the sustainability of direct current transmission lines

Email: Sadeghi.r1358@yahoo.com

ORCID: 0000-0001-5452-2961

*Corresponding author: *Mehdi Jafari shahbazzadeh*, Email: mjafari@iauk.ac.ir

Dr. Mehdi Jafari Shahbazzadeh, was born in Kerman, Iran. He received the PhD degrees in power engineering from the University Shiraz, Iran. He has published more than 33 journal and conference papers in power electronics fields. He is currently with Department of Electrical Engineering, Kerman Branch, Islamic Azad University. His current research interests include G.A, fault current limiters, power system transient.

Email: mjafari@iauk.ac.ir

ORCID: 0000-0002-2940-141X

Introduction

HVDC Transmission System: Due to the ease of production and conversion of AC voltage and current relative to direct current DC, three-phase AC current is accepted as the general and main current of power systems and all consumer equipment and electrical appliances are compatible with this system. In addition, the HVDC systems are used to connect the uncoordinated networks and improve the stability and maintain short circuit level of AC networks connected to them with their high controllability. Nowadays, due to the extensive advances in manufacture of semiconductor devices with higher power and cheaper prices, HVDC transmission has received a great deal of attention attention. HVDC transmission systems consist of a linear commutation converter (LCC) or a voltage source converter (VSC). Classic thyristor-based HVDC systems are limited in power control. This type of controller also utilizes reactive power for rectifier and inverter operation. Therefore, to compensate for the reactive power, a large AC filter is used in the converter stations, which increases the cost of the HVDC system [1-3].

VSC-HVDC System

The system presented in Figure 1 is a point-to-point VSC-HVDC system that is connected from two AC sources by two converters with a 100 km DC link and fed once on the other side. This model uses pre-defined elements in MATLAB software to show DC cables, AC sources, DC link capacitors and converters [4-7].

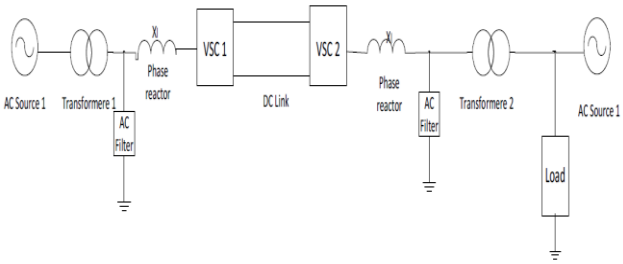

Figure 1. VSC-HVDC point-to-point power system.

The system includes a VSC-HVDC model that is connected to each other by DC cables and forms the DC link. Converters connect to different AC networks on both sides. The target of converter shown is No. 1 to control the AC to DC voltage, while the target of No. 2 is to control the active and reactive power. Also, the power flux from the converter to the AC network is considered as positive flux and vice versa as negative flux of power. The main goal of the VSC-HVDC control system is to maintain the power balance between the two sides of converter, i.e. the DC link side and the AC source side, along with independent power flow control [8-9].

Steam Control System

The basic principles of vector control are AC voltage and currents, which are constant vectors, and therefore an error between the measured vectors and system reference can be removed from the signal with the PI controller. Removal control includes an internal and external control loop. The combination of internal and external control loops allows the active and reactive power to be controlled independently through the internal flow control loop by separating the system currents into DQ components. The d components are used to control the active power or direct voltage and the q component is used to control the reactive power or AC voltage [10-12]. The internal controller controls the converter current to a desired value. This amount of

current is provided by the external control and the AC voltage generator produces three phases for power supply to a controlled voltage source. The external controller controls the active power, reactive power, DC voltage and AC voltage of the system. All measurements of three-phase voltages and currents are taken by the network to control power and voltage in the external controller.

Internal Current Control

The internal current controller is intended for both voltages and the output current controllers are V_q^{ref} and V_d^{ref}, which are obtained through Equation (1) and (2). The VSC1 control system includes AC and DC voltage controllers.

$$V_d^{ref} = V_d - (i_d^{ref} - i_d)(k_p + \frac{k_i}{s}) \quad (1)$$

$$V_q^{ref} = V_q - (i_q^{ref} - i_q)(k_p + \frac{k_i}{s}) \quad (2)$$

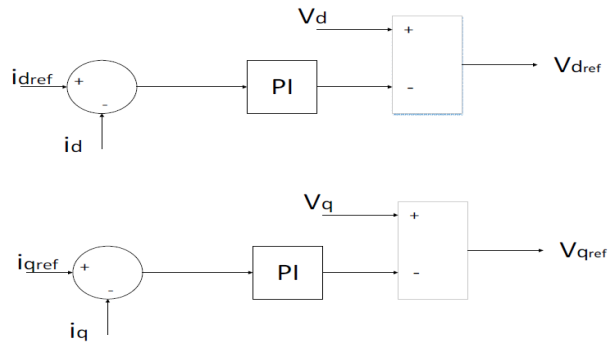

Figure 2. Internal flow control block

DC Voltage Control

The VSC-HVDC system is displayed point-to-point to control the DC voltage in Figure 3.

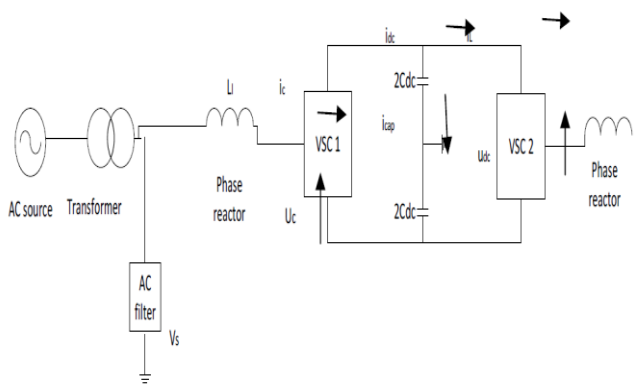

Figure 3. VSC-HVDC system point by point

According to Figure 3, Equation (3) and (4) can be presented:

$$i_{dc} = i_{cap} + i_1 \quad (3)$$

$$C_{dc}\frac{d_{v_{dc}}}{dt} = i_{dc} - i_1 \quad (4)$$

In the VSC-HVDC system, AC and DC power are in balance. So

$$P_{ac} = P_{dc} \quad (5)$$

After taking the park conversion from both sides of the AC voltage and measuring the flow components, the Equation (6) can be presented.

$$V_d\ i_d + V_q\ i_q = V_{dc} i_{dc} \quad (6)$$

The d-axis is aligned with the AC (V_s) filter voltage within the dq reference frame, so we will have:

$$V_{q=0} \quad (7)$$

By placing $V_{q=0}$ in relation (6):

$$i_{dc} = \frac{V_{dc}}{V_{dc}}\ i_{dc} \quad (8)$$

$$C_{dc}\frac{dV_{dc}}{dt} = \frac{V_{dc}}{V_{dc}} i_d - i_l \quad (9)$$

By converting Laplace from the relation (9) we will have:

$$V_{dc} = \frac{1}{SC_{dc}}(\frac{v_d}{v_{dc}} i_d - i_l) \quad (10)$$

Figure 4. DC voltage control block.

To obtain the component of the active current according, the equation of current according to the figure 1 with the DC voltage control block can be presented as a relation (11):

$$i_d^{ref} = \frac{u_{dc}}{v_d} i_l + \left(K_p + \frac{k_i}{s}\right)\left(u_{dc}^{ref} - u_{dc}\right) \quad (11)$$

AC Voltage Control

The AC voltage controller can control the voltage on the network side for a desired level by adjusting voltage reference. Also, this controller provides the ability to create a reactive current component i_q^{ref} similar to the reactive power controller [13].

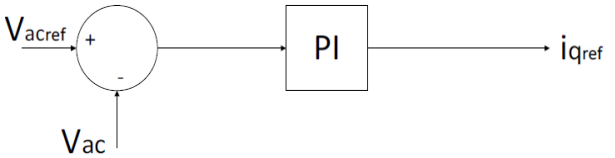

Figure 5. AC voltage control block

Receiver Side Control System

The receiver side control system includes internal flow controllers with active and reactive power controllers [14].

Active and Reactive Power Controller

Active and reactive power instantaneously within the dq device can be represented by the following equation:

$$P_{ac} = v_d i_d + v_q i_q \quad (12)$$

$$Q_{ac} = v_q i_q - v_d i_d \quad (13)$$

The response of the current control loop is assumed to be instantaneous with the external controller. So we will have:

$$i_{dq} = i_{dq}^{ref} \quad (14)$$

By placing the relation (12) and (13), the following relation can be obtained.

$$P_{ac} = v_d\, i_d^{ref} \quad (15)$$

$$Q_{ac} = -v_d\, i_q^{ref} \quad (16)$$

Therefore, considering the above relationships (16), it can be stated that if v_d remains constant in the system, the active and reactive power can be controlled with a simple open loop controller [15].

$$i_q^{ref} = -\frac{Q^{ref}}{v_d} \quad (17)$$

$$i_d^{ref} = \frac{P^{ref}}{v_d} \quad (18)$$

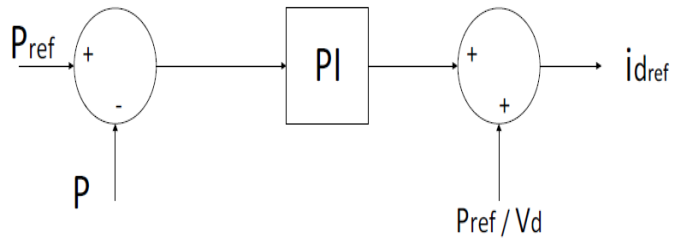

Figure 6. Active power control block

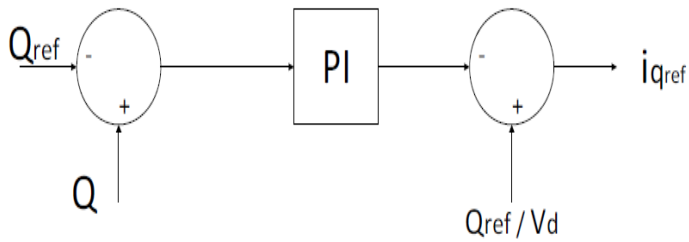

Figure 7. Reactive power control block

Stability of HVDC-VSC Transmission Lines in oil and gas refinery

Since 1920, the sustainability of power systems has been a key issue in improving performance of our known system. It is gratifying to appreciate importance of discussing instability of power systems, the great blackouts in the world. The problem of sustainability of power systems leads to unsustainable transmission, which is most affected by industry. Due to the growth of power systems and their internal connections, use of new technology and controllers, various new states of system instability have emerged. For example, systems that include voltage stability, frequency stability, or load fluctuations have become a major concern for power industry and engineers in the past. With increasing demand for electricity, transmission systems are under increasing pressure due to the issue of stability and thermal limitations and energy absorption, which is one of the most effective ways to transfer large amounts of energy over long distances, creating asynchronous connections between networks. ACs, increased stability, and controllability are uses of the HVDC transfer system [16].

HVDC is a good solution for power transmission systems and will be more involved in the structure of power grids in the future. An advanced technology of

VSC-HVDC transmission systems is that the main features of transmission system with voltage source converters are; ability to independently control active and reactive power in AC network and independent control of AC voltage in each of the two-headed buses. This advantage allows VSC-HVDC to improve voltage control, system stability, and network synchronization stability.

The Purpose of Controlling HVDC VSC Transmission Lines- in the Presence of Fault

The primary goal of direct current network controllers is to dampen power fluctuations in the alternating current network during the transient power system or minimize generator deviation from the system's average frequency.

This is important in large networks, with proper control, can add low voltage controllers. Therefore, stable and dynamic models are developed in which active and reactive power are controlled by an external controller. This external control may be a local actuator controller or a global network controller that controls several lines in a large power system.

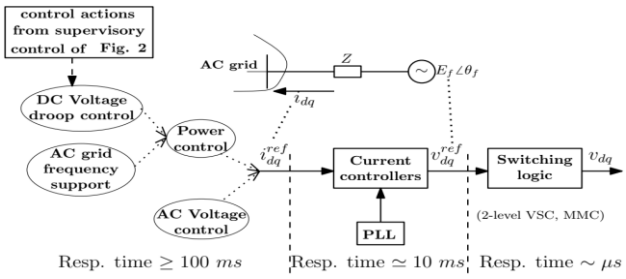

Figure 8. The structure of the VSC-HVDC power transmission system under study

The first approach is to estimate the dynamic state models of the system. Then future behavior of system is predicted and appropriate HVDC injection is selected. For this purpose, an optimized problem is solved using system's discrete time linear model. This method is proven by sampling speed [17].

Predictive Control

The cost function in all forms of robust predictive control is the square regulator cost function as follows:

$$J_0^p(k) = \sum_{i=0}^{P} [\|x(k+i|k)\|_Q^2 + \|u(k+i|k)\|_R^2] \quad 19$$

Where $Q \geq 0$ and $R \geq 0$ are symmetrical weighting matrices. In this paper, as in most research studies in the field of model predictive control, predictive horizon and unlimited control horizon considered infinite. Predictive control with a limited horizon has a weak nominal stability relative to a state with an unlimited horizon. In addition, by considering an unlimited horizon for the cost function, it will be easier to convert the problem to the LMI form and the conditions obtained from it will impose fewer calculations.

For the problem in which the system has uncertainty, it is necessary to optimize a cost function with robust efficiency at any k sampling time instead of the cost function with nominal efficiency. This cost function is:

$$\min_{u(k+i|k).i=0.1.....m} \left(\max_{[A(k+i)\ B(k+i)]\in\Omega} J_0^{\infty}(k) \right)^2_0$$

This cost function actually indicates a min-max optimization problem. Maximum preformation on the Ω set means choosing the time-varying system $[A(k)\ B(k)]\epsilon\Omega. i \geq 0$ which, if used for prediction, the largest value is obtained, in other words the worst case of the objective function $J_0^p(k)$ is obtained from the systems in Ω. This is the worst case scenario for the cost function using the current and future control signals $u(k+i|k). i > 0$.

Predictive Control Model in VSC-HVDC Lines

The goal of MPC model controller is to modulate active and reactive power of VSC-HVDC connections in a coordinated manner, in order to minimize the frequency deviation of all generators. Which is equivalent to limiting oscillations between regions. The MPC-based network controller measures the entire system to create a control model. This control model is projected onto the horizon and simulated best, injecting active power and optimal reactivity to minimize the target function sent to the VSC-HVDC link. Based on network controller MPC only changes different sets depending on the specific sampling time. During this time, the VSC-HVDC adjustment points are kept constant. The power modulation of VSC-HVDC connections, which completely increases behavior of power system, is applied by $\hat{U}_{K*}$, which is the first element of optimization sequence. Inequality constraints (4.24) that power constraints, power

ramping constraints, to adjust the HVDC power compared to the previous control operation [18].

The new value $U_{K*} = \hat{U}_{K*} + U_0$ is applied to the VSC-HVDC terminal for active and reactive power and is kept constant, for the whole sampling interval $t_{K*}, t_{K*} + T_{mpc}$ to obtain a new reference value from the MPC-based network controller.

MPC-based oscillation adjustment controller: the goal of network controller is to improve the performance of power grid when switching modes by injecting power into HVDC links. A classic approach is to design a controller to adjust the specific state of the system, which is based on the local values of the HVDC terminals. The optimal control of the controller depends on the network topology, the HVDC position in the network and oscillation modes considered. Changing any of these parameters requires a controller setting, or they need to be considered with a powerful setting [19].

In contrast, an MPC-based control scheme can respond to system changes without additional adjustment [64]. This MPC-based controller was first introduced in previous studies [60]. This approach first gains an estimate of the dynamics of system models. Then the future behavior of predicted system and the appropriate HVDC injection are selected. Now, an optimization problem is solved using a linear model of system rupture time. This process is repeated at a constant sampling rate.

An estimate of the overall dynamic status can be obtained using WAMS, which is usually used on a slower time scale to monitor the power system, but can also be used on a faster scale than the power system control. Although the local estimate of phase voltage of network is fast enough, the implementation of the control approach also requires transfer of values to the controller and the control signals to the VSC. This dissertation assumes that state of the system can be directly measured and ignores communication delays.

The main purpose of the HDVC network controller is to adjust the power fluctuations in the AC network during transient state of the system. In other words, to minimize generator frequency deviations from the average system frequency:

$$\overline{\omega}(t) = \frac{\sum_{i=1}^{n_{gen}} H_i \omega_i(t)}{\sum_{i=1}^{n_{gen}} H_i} \quad (21)$$

Which is weighed by the stationary constants of n_{gen} generatorsH_i. The goal function J is the relative square frequency error:

$$J(t) = \frac{\sum_{i=1}^{n_{gen}} H_i(\omega_i(t) - \overline{\omega}(t))^2}{\sum_{i=1}^{n_{gen}} H_i} \quad (22)$$

In which

$$\sigma_\omega(t) = \sqrt{J(t)} \quad (23)$$

The frequency deviation measures the average between the generators of the system. Based on the assumption that $\hat{D}$ is from to zero, can be written as a secondary matrix statement.

$$J_k = J(t_k) = \hat{Z}_k^T Q_{\hat{z}_k} \quad (24)$$

The input vector is as follows:

$$\hat{z}_k = \left[\hat{X}_k^T . 1\right]^T \quad (25)$$

Q matrix can be defined as:

$$Q = Z^T diag\ (h) Z \quad (26)$$

In which:

$$Z = [I - M] \cdot [c. y_0] \quad (27)$$

$$M = [h. \cdots . h]^T \quad (28)$$

$$h = \frac{[H_1 . \cdots . H_{n_{gen}}]^T}{\sum_{i=1}^{n_{gen}} H_i} \quad (29)$$

Control Formulation

The MPC-based network controller solves the second-order optimization problem for K^* sampling at any time:

$$\min_{\hat{u}_{k^*} . \cdots . \hat{u}_{k^*+N-1}} \sum_{k=k^*}^{k^*+N} \hat{z}_k^T Q_{\hat{z}_k} \quad (30)$$

In which:

$$\forall k \in \{k^* . k^* + 1 . \cdots . k^* + N\} \quad (31)$$

$$\hat{X}_{k^*+1} = \hat{A}\hat{x}_k + \hat{B}\hat{u}_k + \hat{f}_0 \quad (32)$$

$$u_{min} \leq \hat{u}_k + u_0 \leq u_{max} \quad (33)$$

$$d_{min} \leq \hat{u}_{k+1} + \hat{u}_k \leq d_{max} \quad (34)$$

The future behavior of system on the N prediction horizon is considered a time step. Power modulation The VSC-HVDC links, which best improve behavior of power system, are defined as $\hat{u}_{k*}$, the first element in the optimization sequence. An unequal limit (33) ensures that the permissible power limitations of the VSC-HVDC link are not violated, and (34) is a ramp limit that defines the magnification of the HVDC power setting compared to the previous control action. New reference values $u_{k*} = \hat{u}_{k*} + u_0$ are applied to each VSC-HVDC terminal for active and reactive power and are kept constant for the entire sampling interval; $[t_{K*}. t_{K*} + T_{mpc}$. Until a new reference value is obtained from the MPC-based network controller

Local Control with PD Controller

The local damper controller changes the injection power to the VSC-HVDC connection terminals based on measurements obtained locally at the converter terminals. This local controller adjusts the active power of the HVDC connection by the PD controller and low-pass filter. It is necessary to measure the frequency difference between the two VSCs. Local voltage controllers can significantly improve voltage, compared to cases where the injection power of the VSC-HVDC connection is uncontrolled [20].

An MPC-based network controller is able to control voltage faster than a local controller, even if it is not part of its purpose. We will show that injection of active and reactive power is connected to the HVDC connection, which is with the local controller and with the MPC-based controller, which in both cases simulates the active power as well as reactive power. We also show that reactive power at both terminals is limited by VSC internal control in less time than local control mode. And then the MPC control length, the reactive power in the voltage is also limited to a lesser extent than local control.

The local power adjustment controller can change the power of the VSC-HVDC links based on the values received locally in the converter terminals. The local controller selects a setting for the HVDC active power, ΔP_1, with a relative differential controller (PD) and a low-pass filter. The value is equal to the difference in frequencies (ω_1, ω_2) in the two VSCs.

$$\Delta P_1 = (K_P + \frac{sK_D}{1+sT_D}) \cdot (\omega_1 . \omega_2) \quad (35)$$

The controller benefits are PD, K_P , and K_i, which calculate the value of the parameters by Mr. R.eriksson in his doctoral dissertation entitled Security-centered Coordinated Control in AC/DC Transmission Systems. That the relative productivity of K_P is the correct productivity ofK_i.

Simulation

Figure 9 shows the single-line diagram of the sample

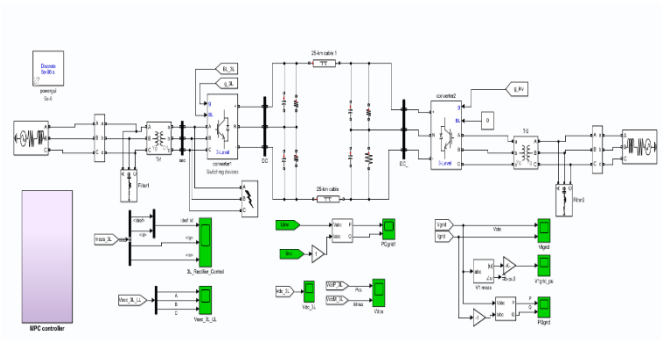

power system used in this project

Figure 9. Sample power system, Block Diagram for MPC-based VSC-HVDC model

Sample Power System Specifications:

A two-zone system with the following parameters is presented in the design of the network controller.

Parameters of VSC-HVDC system

This system was disturbed by causing a fault in AC line between bass 2 and 1 after a second$t = 1\ s$). Depicts AC bass three-phase voltage before, during, and after the fault, which will be damped by MPC control system at 0.05 s. damping and fault removal time below 0.05 s was simulated using the MATLAB software.

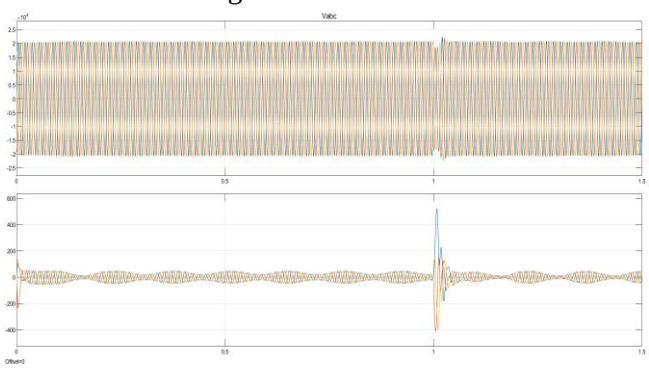

Figure 10. Main 1 and 2 bass voltages controlled by MPC in VSC-HVDC link

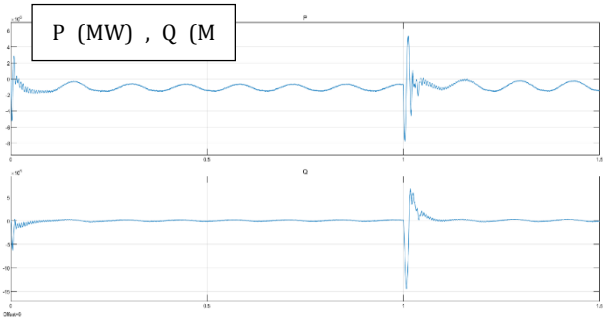

The system was simulated in MATLAB. The frequencies show the generators for no-control mode for injection in VSC-HVDC. Due to voltage drop, the frequencies are not constant. MPC-based balance controller can minimize frequency deviation after fault and stabilize generator frequencies much faster than local controller (Fig. 10).

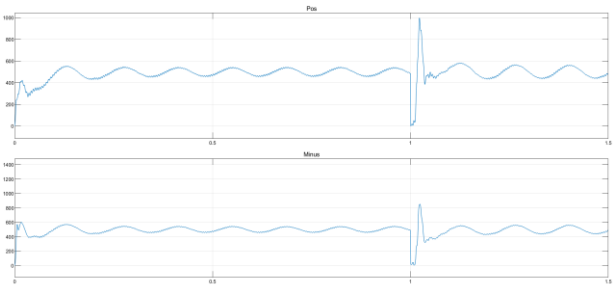

Figure 11. Depicts DC terminal voltages controlled in bass 1 when power injection is controlled according to MPC-based controller during fault.

This system was disturbed by causing a fault in AC line between bass 1 and 2. This damping and fault removal was simulated in MATLAB. This system occurred with a connection in AC line at the side of rectifier.

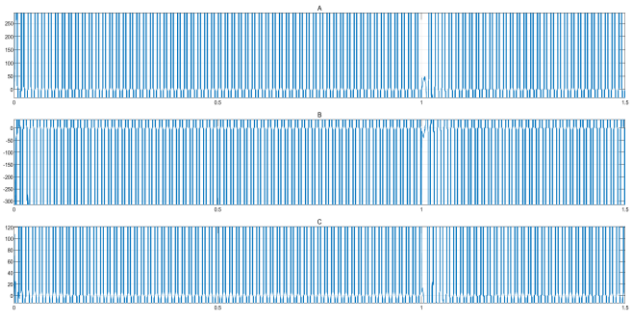

Figure 12. Three -phase voltage changes during fault by using HVDC-VSC link through MPC controller

Fig. 13, show the comparison of active and reactive power injections in both local control and predictive control [21].

Reference figure for sampling range remains constant, $[\hat{t}_{k^*}.t_{k^*} + T_{mpc}]$, until a new reference figure is obtained by MPC-based grid controller [18]. Power injection into the terminals of the converters at two sides of HVDC in a very short time stabilizes fault instantly. The biggest difference is that the regulated points for MPC-based controlled HVDC link changes only after a short time and can compensate the lost transmission capacity of the line after the disturbance and consequently, compensates frequency fault between the areas at a faster rate whereas this change by local controller is in a constant manner. The present work proposed an MPC-based grid controller. The aim of this work was to modulate active and reactive power of VSC-HVDC links. This goal is proportionate to the regulation of inter-area oscillations. MPC-based grid controller receives figures throughout the system and creates a control model. This control model was simulated using a predictive horizon and best VSC-HVDC active and reactive injections. So it minimized the sent objective function to the VSC-HVDC links. MPC-based grid controller changes given sampling time only based on a setting with fixed VSC-HVDC. In this range, all the points are regulated. Two different states were simulated. In the first state, the VSC-HVDC link was controlled with a local controller using local figures. The active power was controlled using a PD controller. Reactive power in two VSC terminals was modulated according to PI controller control signal where Vs terminal voltage controls AC. In the second state, the VSC-HVDC link modulates active and reactive power controlled by MPC controller. MPC-based controller works with the sampling time 100 ms and its predictive horizon includes 50 steps, i.e. 50 ms. Active and reactive power limits are$\pm 0.2\ p.u/T_{mpc}$. The weight α and β in the objective function were chosen. The converted frequency deviation is between 0.98 p.u. and 1.02 p.u. Therefore, the eligible range will be 0.04 p.u. In contrast, eligible voltage range in standard system is between 0.9 p.u. and 1.10 p.u. [19]

and therefore, the eligible range will be 0.20 p.u. Here, α and β normalize these ranges, which yields:

$$\alpha = \left(\frac{1}{0.04}\right)^2 = 625 \qquad (36)$$

$$\beta = \left(\frac{1}{0.20}\right)^2 = 25 \qquad (37)$$

A MPC-based grid controller was proposed that regulates active and reactive power in VSC-HVDC links during faults. The purpose is that AC terminal voltage during fault is controlled by VSC-HVDC links and all AC bass voltages are in the eligible ranges where inter-area oscillations are simultaneously balanced. There three aims for the controller: first, minimizing voltage from distinct regulatory points in AC terminal basses in VSC-HVDC links to control AC voltage in VSC-HVDC; second, minimizing frequency fault in generators from mean system frequency to balance inter-area oscillations; and third, minimizing cutoff variables of voltage limitation to keep all AC voltages in their operational range. MPC-based grid controller can coordinate control practices of each link and predict future control practices of each link. Therefore, optimal active and reactive power direction can be achieved in order to improve system stability. It was shown in the present work that MPC-based controller outperforms local controller, which could be explained by its advantages of predictive and coordinated control of all links in VSC-HVDC system.

Conclusion

The present work determined the stabilization of real and reactive power in two-area system using an MPC-based grid controller. Moreover, performance of the MPC control scheme was introduced by launching it on a two-area system during a fault. Simulation results revealed that the general MPC controller could successfully reduce the power oscillations in the two-area system during the fault in AC grid. Therefore, the proposed control scheme can be used for the damping power oscillations in power systems based on VSC-HVDC. In addition, the VSC-HVDC links resulted in the increased stability of the power system by regulating the active and reactive power. For this aim, appropriate models of these links were evaluated. To increase the stability of power system using the VSC-HVDC links, an MPC-based grid controller was developed. Another advantage is that if there is a multiple bond in the system, the controller is able to coordinate the control practices and estimate the optimal points for links based on the objective function. Two MPC-based grid controllers were proposed. There are two goals for the controller: first, controlling AC terminal voltage by minimizing the voltage difference in a given set and second, keeping all AC bass voltage in operational range. The VSC-HVDC links are controlled in a coordinated manner and optimal power injection that increases the voltage stability is sent to converters and exerted by converter controller. This controller was tested on a small two-area system to confirm this claim. The results indicated that the MPC-based grid controller is able to improve the voltage stability by controlling the VSC-HVDC link power injection in a coordinated method compared to a non-central local control program.

Declaration of Competing Interest

The author declared that they have no conflicts of interest to this work.

References

[1] Adapa, R, High-wire act: Hvdc technology: The state of the art, IEEE power and energy magazine, 10(6) (2012), 18-29.

[2] Mozafari AS, Jamzad M, A SVM-based model-transferring method for heterogeneous domain adaptation, Pattern Recogn 56(1) (2016), 142–158.

[3] Aboul-Ela, M. E., Sallam, A. A., McCalley, J. D., & Fouad, A. A, Damping controller design for power system oscillations using global signals, IEEE Transactions on Power Systems, 11(2) (1996), 767-773.

[4] Maheswari L, Srinivasa Rao P, Sivakumaran N, A control strategy to enhance the life time of the battery in a stand-alone PV system with DC loads. IET Power Electron, 10(9) (2017), 1087–1094.

[5] Lee J-H, Liang T-J, Chen J-F, Isolated coupled-inductor integrated DC–DC converter with non-dissipative snubber for solar energy applications, IEEE Trans Ind Electron, 61(7) (2014), 3337–3348.

[6] J. Zhao, J. Huang, & N. Xiong, An Effective Exponential-Based Trust and Reputation Evaluation System in Wireless Sensor Networks, IEEE Access, 7 (2019), 33859-33869

[7] Namara Mc, Negenborn P, De Schutter B, & Light body, G, Optimal coordination of a multiple HVDC

link system using centralized and distributed control, IEEE Transactions on Control Systems Technology, 21(2) (2012), 302-314.

[8] Cole, S., Beerten, J., & Belmans, R, generalized dynamic VSC MTDC model for power system stability studies, IEEE Transactions on Power Systems, 25(3) (2010), 1655-1662.

[9]G. Han, J. Jiang, L. Shu, J. Niu, H.-C. Chao, Management and applications of trust in Wireless Sensor Networks: A survey, Journal of Computer and System Sciences, 80(3) (2014), 602-617.

[10] Axelrod B, Berkovich Y, Ioinovici A, "Switched capacitor/ switched-inductor structures for getting transformer less hybrid DC–DC PWM converters", IEEE Trans Circuits Syst I, 55(2) (2008), 1159–1171.

[11] Kazmierkowski, M. P., & Malesani, L, Current control techniques for three-phase voltage-source PWM converters: A survey, IEEE Transactions on industrial electronics, 45(5) (1998), 691-703.

[12] Muhammad M, Armstrong M, Elgendy MA, Analysis and implementation of high-gain non-isolated DC–DC boost converter, IET Power Electron, 10(11) (2017), 1241–1249.

[13] Fuchs A, Mariéthoz S, Larsson M, Morari M, "stabilization of large power system using vsc-hvdc and model predictive control", IEEE TRANSACTIONS ON POWER DELIVERY, 29(1) (2012), 1-6.

[14] Smed, T., Andersson, G, Utilizing HVDC to damp power oscillations, IEEE Transactions on Power Delivery, 8(2) (1993), 620-627.

[15] Tseng K-C, Lin J-T, Huang C-C, "High step-up converter with three-winding coupled inductor for fuel cell energy source applications", IEEE Trans Power Electron, 30(2) (2015), 574–581.

[16] Z. Chen, L. Tian, & C. Lin, "Trust Model of Wireless Sensor Networks and Its Application in Data Fusion", Sensors (Basel), 17(3) (2017), 703

[17] Tang Y, Fu D, Kan J, "Dual switches DC/DC converter with three-winding-coupled inductor and charge pump", IEEET rans Power Electron, 31(1) (2016), 461–469

[18] Tseng K-C, Chen J-Z, Lin J-T, "High step-up interleaved forward-fly back boost converter with three-winding coupled inductors", IEEE Trans Power Electron, 30(9) (2015), 4696–4703.

[19] Chu GML, Lu DDC, Agelidis VG, "Fly back-based high step up converter with reduced power processing stages", IET Power Electron, 5(3) (2012), 349–357.

[20] Emrani A, Adib E, Farzaneh fard H, "Single-switch soft switched isolated DC–DC converter:, IEEE Trans Power Electron, 27(4) (2012), 1952–1957.

[21] D.D.S. Braga, M. Niemann, B. Hellingrath, F.B.D.L. Neto, "Survey on Computational Trust and Reputation Models", ACM Computing Surveys, 51(5) (2019), 101-110.

How to cite this manuscript: Roohollah Sadeghi Goughari, Mehdi Jafari Shahbazzadeh. Modeling and Optimization in VSC-HVDC Transmission Lines in Chemical Industry, A review: Mini-Review. *Journal of Chemical Reviews* (*J. Chem. Rev.*), 2020, 2(4), 272-282.

DOI: 10.22034/jcr.2020.248901.1086